Summary in Graph

Exam Summary (GO Classes CS Test Series 2026 | Mock GATE | Test 2)

Qs. Attempted:	0 (0 + 0)	Correct Marks:	0 (0 + 0)
Correct Attempts:	0 (0 + 0)	Penalty Marks:	0 (0 + 0)
Incorrect Attempts:	0 (0 + 0)	Resultant Marks:	0 (0 + 0)

Total Questions:	65 (30 + 35)
Total Marks:	100 (30 + 70)
Exam Duration:	180 Minutes
Time Taken:	0 Minutes

Individual Question Statistics

Select Metric: Marks Obtained

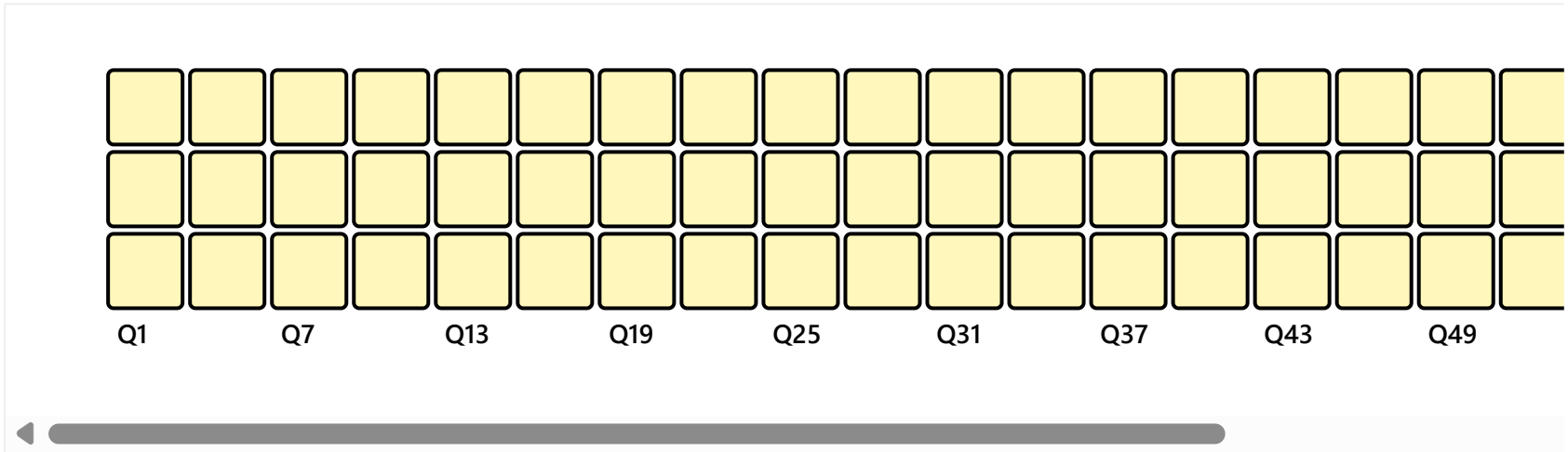

* Average Stats based on first-attempt stats of Top 10% (212) out of 2115 users

EXAM RESPONSE | EXAM STATS | FEEDBACK

Aptitude

Q #1 | Multiple Choice Type | Award: 1 | Penalty: 0.33 | Quantitative Aptitude

Which of the following functions f defined for all numbers x has the property that $f(-x) = -f(x)$ for all numbers x?

A. $f(x) = \frac{x^3}{x^2+1}$
B. $f(x) = \frac{x^2-1}{x^2+1}$
C. $f(x) = x^2\left(x^2-1\right)$

D. $f(x) = x\left(x^3 - 1\right)$

Your Answer: | Correct Answer: A | Not Attempted | Time taken: 00min 00sec | Discuss

Q #2 | Multiple Choice Type | Award: 1 | Penalty: 0.33 | Verbal Aptitude

Fill the most appropriate phrase in the blank out of the given options.
Nothing ____ like seeing these cyclists run every red light in town.

A. buy a pig in a poke
B. blow my own trumpet
C. sets my teeth on edge
D. blunt the edge

Your Answer: | Correct Answer: C | Not Attempted | Time taken: 00min 00sec | Discuss

Q #3 | Multiple Choice Type | Award: 1 | Penalty: 0.33 | Quantitative Aptitude

"A" can do a work in 12 days and "B" can do the same work in 24 days. If they work on it together for 4 days, then what fraction of work is left?

A. $1/2$
B. $1/4$
C. $1/3$
D. $1/5$

Your Answer: | Correct Answer: A | Not Attempted | Time taken: 00min 02sec | Discuss

Q #4 | Multiple Choice Type | Award: 1 | Penalty: 0.33 | Quantitative Aptitude

The ratio of monthly income of $\mathrm{A\&B}$ is $4:5$ And that of their monthly Expenditure is $3:8$. If the income of A is equal to the Expenditure of B, then what is the ratio of savings of $\mathrm{A\&B}$.

A. $2:5$
B. $5:2$
C. $8:3$
D. $5:4$

Your Answer: | Correct Answer: B | Not Attempted | Time taken: 00min 00sec | Discuss

Q #5 | Multiple Choice Type | Award: 1 | Penalty: 0.33 | Analytical Aptitude

A and B start from the same point. A walks $35\ \mathrm{m}$ South, then turns West and walks $15\ \mathrm{m}$, then turns to his right and walks $45\ \mathrm{m}$. At the same time, B walks $25\ \mathrm{m}$ North, then turns to his left and walks $15\ \mathrm{m}$. Where is B now with respect to the position of A.

A. B is $95\ \mathrm{m}$ to the North of A
B. B is $15\ \mathrm{m}$ to the South of A
C. B is $15\ \mathrm{m}$ to the North of A
D. B is $95\ \mathrm{m}$ to the South of A

Your Answer: | Correct Answer: C | Not Attempted | Time taken: 00min 00sec | Discuss

Q #6 | Multiple Choice Type | Award: 2 | Penalty: 0.67 | Analytical Aptitude

- A@B means 'A is the mother of B'
- A#B means 'A is the sister of B'
- A?B means 'A is the daughter of B'

Which of the following expressions means 'x is the daughter of y'?

A. $y@z?x\#w$
B. $y@z\#x?w$
C. $w@z?x\#y$
D. $w@x?z\#y$

Your Answer: | Correct Answer: B | Not Attempted | Time taken: 00min 00sec | Discuss

Q #7 | Multiple Choice Type | Award: 2 | Penalty: 0.67 | Quantitative Aptitude

If a solid metal square prism whose base perimeter is 36 cm and height 9 cm is melted and forms a closed hollow pyramid (negligible thickness) with a square base of side 3 cm. What would be the slant height of the lateral surface of the pyramid?

A. 3 cm

B. 120 cm

C. 81 cm

D. 72 cm

Your Answer: | Correct Answer: B | Not Attempted | Time taken: 00min 00sec | Discuss

Q #8 | Multiple Choice Type | Award: 2 | Penalty: 0.67 | Quantitative Aptitude

If a SIX digit number $5z3x4y$ is divisible by $7, 11, 13$. Then what is the value of $(x + y - z)$?

A. 3
B. 4
C. 5
D. 6

Your Answer: | Correct Answer: B | Not Attempted | Time taken: 00min 00sec | Discuss

Q #9 | Multiple Choice Type | Award: 2 | Penalty: 0.67 | Quantitative Aptitude

What is the average of numbers from 1 to 50 which are multiple of 2 or 5?

A. 25.4
B. 25.9
C. 26.4
D. 25.8

Your Answer: | Correct Answer: D | Not Attempted | Time taken: 00min 00sec | Discuss

Q #10 | Multiple Choice Type | Award: 2 | Penalty: 0.67 | Quantitative Aptitude

The quantities S and T are positive and are related by the equation $\mathrm{S} = \frac{k}{T}$, where k is a constant. If the value of S increases by 50 percent, then the value of T decreases by what percent?

A. 25%
B. $33\frac{1}{3}\%$
C. 50%
D. $66\frac{2}{3}\%$

Your Answer: | Correct Answer: B | Not Attempted | Time taken: 00min 00sec | Discuss

Technical

Q #1 | Multiple Choice Type | Award: 1 | Penalty: 0.33 | Probability

Let X be a discrete random variable which is uniform over the set $\{1, 2, 3 \ldots n\}$ i.e, $\mathrm{P}[\mathrm{X} = k] = \frac{1}{n}$ for all i in $\{1, 2, 3 \ldots n\}$.

Compute $\mathrm{E}\left[\mathrm{X}^2\right]$

A. $\frac{n(n+1)}{2}$
B. $\left(\frac{n(n+1)}{2}\right)^2$
C. $\frac{n(n+1)(2n+1)}{6}$
D. $\frac{(n+1)(2n+1)}{6}$

Your Answer: | Correct Answer: D | Not Attempted | Time taken: 00min 00sec | Discuss

Q #2 | Multiple Choice Type | Award: 1 | Penalty: 0.33 | Theory of Computation

Let L be a language consisting of finitely many strings. Hence, L is regular and, therefore, context-free.

Let k be the maximum length of any string in L.

Which of the following is true for the context-free grammars that generate L?

A. Every context-free grammar in Chomsky's normal form that generates L has more than $\log(k)$ variables. (The logarithm is in base 2.)
B. Some context-free grammar in Chomsky's normal form that generates L has less than $\log(k)$ variables. (The logarithm is in base 2.)
C. Every context-free grammar in Chomsky's normal form that generates L has exactly $2k - 1$ variables.
D. There is a context-free grammar in Chomsky's normal form that generates L and that has only one variable.

Your Answer: | Correct Answer: A | Not Attempted | Time taken: 00min 00sec | Discuss

Q #3 | Multiple Select Type | Award: 1 | Penalty: 0 | Theory of Computation

For any language L, we define two operations, square and double as follows:

- The square of a language L is $\mathrm{Sq}(\mathrm{L}) = \{ww : w \in \mathrm{L}\}$;
- The double of a language is $\mathrm{Do}(\mathrm{L}) = \{wx : w, x \in \mathrm{L}\}$.

Which of the following is/are false?

A. If L is regular, $\mathrm{Do}(\mathrm{L})$ must be context-free.
B. If L is regular, $\mathrm{Sq}(\mathrm{L})$ must be context-free.
C. If L is context-free, $\mathrm{Do}(\mathrm{L})$ must be context-free.
D. If L is context-free, $\mathrm{Sq}(\mathrm{L})$ must be context-free.

Your Answer: | Correct Answer: B;D | Not Attempted | Time taken: 00min 00sec | Discuss

Q #4 | Multiple Choice Type | Award: 1 | Penalty: 0.33 | Theory of Computation

$$\mathrm{S} \rightarrow a\mathrm{S}b \mid b\mathrm{S}a \mid \mathrm{SS} \mid \epsilon$$

Which of the following best characterizes the language generated by the grammar above?

A. All strings of the form $a^i b^j a^k$, where $i + j = k$
B. All palindromes over a and b
C. All strings with equal numbers of a's and b's
D. All strings of the form ww^{R}, where $w \epsilon \{a, b\}^*$

Your Answer: | Correct Answer: C | Not Attempted | Time taken: 00min 00sec | Discuss

Q #5 | Multiple Choice Type | Award: 1 | Penalty: 0.33 | Digital Logic

A logic circuit implements the boolean function $\mathrm{F} = \overline{\mathrm{X}} \cdot \mathrm{Y} + \mathrm{X} \cdot \overline{\mathrm{Y}} \cdot \overline{\mathrm{Z}}$. It is found that the input combination $\mathrm{X} = \mathrm{Y} = 1$ can never occur. Taking this into account, a simplified expression for F is given by

A. $\overline{\mathrm{X}} + \overline{\mathrm{Y}} \cdot \overline{\mathrm{Z}}$
B. $\mathrm{X} + \mathrm{Z}$
C. $\mathrm{X} + \mathrm{Y}$
D. $\mathrm{Y} + \mathrm{X} \cdot \overline{\mathrm{Z}}$

Your Answer: | Correct Answer: D | Not Attempted | Time taken: 00min 00sec | Discuss

Q #6 | Multiple Choice Type | Award: 1 | Penalty: 0.33 | Digital Logic

The result of the following addition

$$\begin{array}{r} 11110111 \\ +11110111 \end{array}$$

in 2's complement representation on 8 bits is:

A. 11101110 and the result is correct,
B. 11101110 but there is an overflow,
C. 11101111 and the result is correct

D. 11101111 but there is an overflow.

Your Answer: | Correct Answer: A | Not Attempted | Time taken: 00min 00sec | Discuss

Q #7 | Multiple Choice Type | Award: 1 | Penalty: 0.33 | Digital Logic

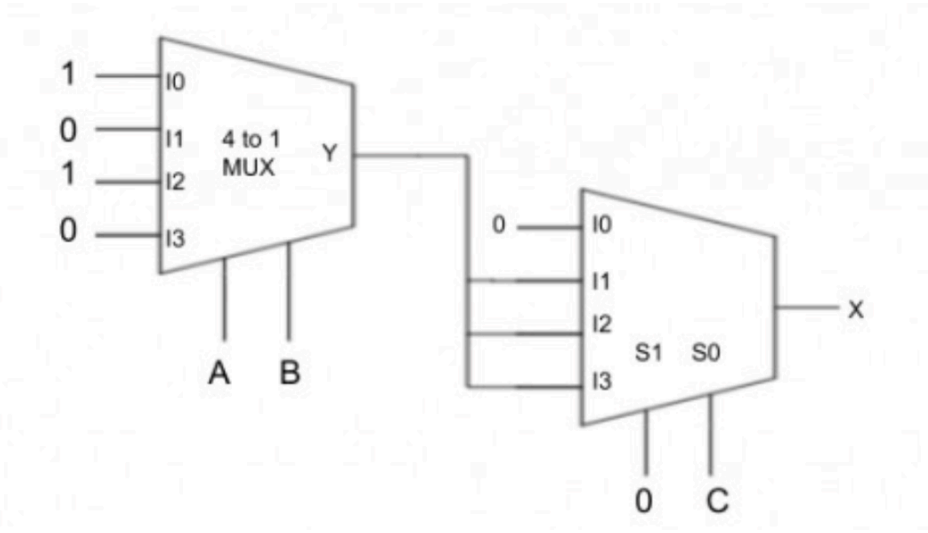

In the following circuit, X is given by

A. $\mathrm{C}+\mathrm{B}$
B. $\mathrm{C}'+\mathrm{B}'$
C. CB'
D. $\mathrm{C}'+\mathrm{B}$

Your Answer: | Correct Answer: C | Not Attempted | Time taken: 00min 00sec | Discuss

Q #8 | Multiple Choice Type | Award: 1 | Penalty: 0.33 | Set Theory & Algebra

The degree of a relation is the number of attributes it contains. The cardinality of a relation is the number of tuples it contains. Let r be a relation of degree 10. How many different projections of r are possible?

A. 10
B. 9
C. 11
D. 1023

Your Answer: | Correct Answer: D | Not Attempted | Time taken: 00min 00sec | Discuss

Q #9 | Multiple Select Type | Award: 1 | Penalty: 0 | Databases

Which of the following rules about functional dependencies is valid?

A. If $\alpha \rightarrow \beta$ and $\gamma \rightarrow \beta$, then $\alpha \rightarrow \gamma$.
B. if $\alpha \rightarrow \beta$ and $\alpha \rightarrow \gamma$ then $\alpha \rightarrow \beta\gamma$.
C. if $\alpha \rightarrow \beta\gamma$, then $\alpha \rightarrow \beta$ and $\alpha \rightarrow \gamma$.
D. if $\alpha \rightarrow \beta$ and $\gamma\beta \rightarrow \delta$, then $\alpha\gamma \rightarrow \delta$.

Your Answer: | Correct Answer: B;C;D | Not Attempted | Time taken: 00min 00sec | Discuss

Q #10 | Multiple Choice Type | Award: 1 | Penalty: 0.33 | CO & Architecture

Consider the following instruction sequence in a single-issue in-order 5-stage pipeline (IF, ID, EX, MEM, and WB).

Opcode	Destination	Source1	Source2	
ADD	R1	R2	R3	← First instruction to enter the pipeline
SUB	R2	R3	R1	
MUL	R1	R2	R3	← Last instruction to enter the pipeline

How many data hazards does the ID stage need to detect for this instruction sequence?

A. 1
B. 2
C. 3
D. 4

Your Answer: | Correct Answer: B | Not Attempted | Time taken: 00min 00sec | Discuss

Q #11 | Numerical Type | Award: 1 | Penalty: 0 | CO & Architecture

A particular instruction set has five categories of instructions. For a hardware implementation, instructions in each category take the number of cycles shown below:

Category	A	B	C	D	E
CPI	1	3	2	5	4

A certain machine code program contains the following proportions of instructions from the five categories:

Category	A	B	C	D	E
Proportion	20%	30%	25%	20%	5%

Calculate the average CPI for this program.

Your Answer: | Correct Answer: 2.8 | Not Attempted | Time taken: 00min 00sec | Discuss

Q #12 | Multiple Choice Type | Award: 1 | Penalty: 0.33 | Digital Logic

A decimal number "A" is represented in 2's complement binary form as $a_n a_{n-1} \ldots a_0$. Which of the following correctly represents "A"?

A. $A = -2^{n-1}a_n + \sum_{i=0}^{n-2} 2^i a_i$
B. $A = -2^{n}a_n + \sum_{i=0}^{n} 2^i a_i$
C. $A = -2^{n}a_n + \sum_{i=0}^{n-1} 2^i a_i$
D. $A = -2^{n-1}a_{n-1} + \sum_{i=1}^{n-1} 2^i a_i$

Your Answer: | Correct Answer: C | Not Attempted | Time taken: 00min 00sec | Discuss

Q #13 | Multiple Choice Type | Award: 1 | Penalty: 0.33 | CO & Architecture

A processor with a word-addressable memory has a two-way set-associative cache. A cache line is one word, so a cache entry contains a set of two words. If there are M words of memory and C cache entries, how many words of memory map to the same cache entry?

A. M/C
B. $2M/C$

C. $M/2C$
D. $M/2$

Your Answer: | Correct Answer: A | Not Attempted | Time taken: 00min 00sec | Discuss

Q #14 | Multiple Select Type | Award: 1 | Penalty: 0 | Graph Theory

Suppose that you are at a party. Any two people either have met (they are acquaintances) or have never met (they are strangers). Which of the following must be true at a party with at least two people present?

A. There are at least two people with the same number of acquaintances at that party.
B. There are at least two people with different numbers of acquaintances at that party.
C. The number of people with an even number of acquaintances is even.
D. The number of people with an odd number of acquaintances is even.

Your Answer: | Correct Answer: A;D | Not Attempted | Time taken: 00min 00sec | Discuss

Q #15 | Multiple Select Type | Award: 1 | Penalty: 0 | Programming in C

Consider the following code segments.

```
{
    int i = 1;
    if (P)
        printf("Yes");
    else
        printf("No");
}
```

Which of the following is/are options replaced with P will print Yes?

A. $0 \&\& 0 == 0$
B. $0 \&\& 1 == 0$
C. $1 \mid\mid 0 == 0$
D. $1 \mid\mid 1 == 0$

Your Answer: | Correct Answer: C;D | Not Attempted | Time taken: 00min 00sec | Discuss

Q #16 | Numerical Type | Award: 1 | Penalty: 0 | Programming in C

What will be the output printed by the following code?

```c
#include<stdio.h>
void mystery(int* p, int* q, int n) {
    *q = p[1];
    *p = n+1;
    n = 44;
}
void question(int *x, int *y) {
    int a;
    a = 33;
    mystery(x, &a, *y);
}
int main() {
    int p[2] = {11, 22};
    int n = 0;
    question(p, &n);
    printf("%d%d%d", p[0], p[1], n);
    return 0;
}
```

Your Answer: | Correct Answer: 1220 | Not Attempted | Time taken: 00min 00sec | Discuss

Q #17 | Numerical Type | Award: 1 | Penalty: 0 | Data Structures

How many different binary min-heaps are there that hold the keys $1, 2, 5$ and 9?

Your Answer: | Correct Answer: 3 | Not Attempted | Time taken: 00min 00sec | Discuss

Q #18 | Multiple Choice Type | Award: 1 | Penalty: 0.33 | Data Structures

A queue is implemented as a circular array of size 100. (Thus the array index ranges from 0 to 99). If front $= 78$ and rear $= 34$, what is the number of elements currently stored in the queue? (Here: front points to the first element of the queue and rear points a location next to the last element of the queue.)

A. 44
B. 45
C. 55
D. 56

Your Answer: | Correct Answer: D | Not Attempted | Time taken: 00min 00sec | Discuss

Q #19 | Multiple Select Type | Award: 1 | Penalty: 0 | Algorithms

Which of the following are $f(n) = n^{\Theta(1)}$?

A. $f(n) = 3n^3 + 17n^2 + 4.$
B. $f(n) = 3n^3 \log n$
C. $f(n) = n^{3 \log n}$
D. $f(n) = 3 \log n$

Your Answer: | Correct Answer: A;B | Not Attempted | Time taken: 00min 00sec | Discuss

Q #20 | Multiple Choice Type | Award: 1 | Penalty: 0.33 | Algorithms

Consider the following function:

```
int mystery(int m, int n) {
  int p = 1;
  int x = m;
  int y = n;
  while (y ≠ 0) {
    if (y % 2 == 0) {
      x *= x;
      y /= 2;
    }
    else {
      y -= 1;
      p *= x;
  } }
  return p;
}
```

What is the cost in time in the worst case as a function of n of mystery (m, n)?. Assume $m > 0, n > 0$.

A. $\theta(\log n)$
B. $\theta(n \log n)$
C. $\theta(n)$
D. Worst-case time can not be expressed as theta notation hence A, B, and C are wrong.

Your Answer: | Correct Answer: A | Not Attempted | Time taken: 00min 00sec | Discuss

Q #21 | Multiple Choice Type | Award: 1 | Penalty: 0.33 | Algorithms

Consider the below weighted graph where weight of the edge e is written as $w(e)$.

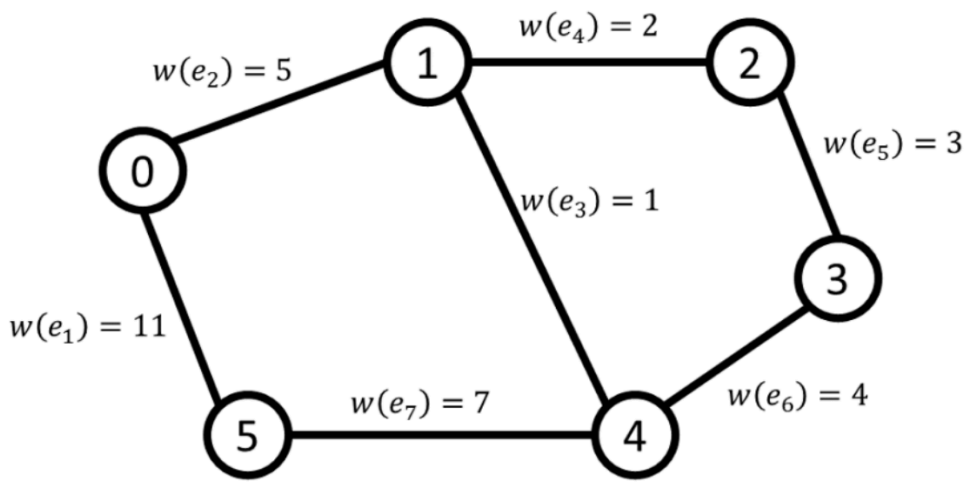

If we run Dijkstra's algorithm with $s = 0$, in which order will the vertices be deleted from the Priority Queue?

A. $0, 1, 2, 3, 4, 5$
B. $0, 1, 4, 2, 3, 5$
C. $0, 1, 5, 4, 2, 3$
D. $0, 1, 2, 4, 5, 3$

Your Answer: | Correct Answer: B | Not Attempted | Time taken: 00min 00sec | Discuss

Q #22 | Numerical Type | Award: 1 | Penalty: 0 | Operating System

We want to use semaphores to implement a shared critical section (CS) among three threads $\mathrm{T1}$, $\mathrm{T2}$, and $\mathrm{T3}$. We want to enforce the execution in the CS in this order: First $\mathrm{T2}$ must execute in the CS. When it finishes, $\mathrm{T1}$ will then be allowed to enter the CS; and when it finishes $\mathrm{T3}$ will then be allowed to enter the CS; when $\mathrm{T3}$ finishes then $\mathrm{T2}$ will be allowed to enter the CS, and so on, $(\mathrm{T2}, \mathrm{T1}, \mathrm{T3}, \mathrm{T2}, \mathrm{T1}, \mathrm{T3}, \ldots)$. What is the minimal number of semaphores we need in order to implement this ordering and mutual exclusion?

Your Answer: | Correct Answer: 3 | Not Attempted | Time taken: 00min 00sec | Discuss

Q #23 | Numerical Type | Award: 1 | Penalty: 0 | Computer Networks

Consider an error-free 64-kbps ($1\text{k} = 10^3$) satellite channel used to send 512-byte data frames in one direction, with very short acknowledgements coming back the other way.

What is the maximum throughput (in bits per second up to one decimal) for window size of 7? The earth-satellite propagation time is 270msec.

(Calculate the throughput from the beginning of the first frame transmission, i.e., include transmission time in the calculation of throughput).

(Round off your answer to one decimal place.)

Your Answer: | Correct Answer: 47470.19:47470.2 | Not Attempted | Time taken: 00min 00sec | Discuss

Q #24 | Multiple Choice Type | Award: 1 | Penalty: 0.33 | Computer Networks

Suppose a router has built up the routing table shown in the following table. The router can deliver packets directly over interfaces 0 and 1, or it can forward packets to routers R2, R3, or R4. Assume the router does the longest prefix match.

Subnet Number	Subnet Mask	Next Hop
128.96.170.0	255.255.254.0	Interface 0
128.96.168.0	255.255.254.0	Interface 1
128.96.166.0	255.255.254.0	R 2
128.96.164.0	255.255.252.0	R 3
Default		R4

What will be the next hop for a packet with destination IP address $128.96.167.151$?

A. R2
B. R3
C. R4
D. Interface 1

Your Answer: | Correct Answer: A | Not Attempted | Time taken: 00min 00sec | Discuss

Q #25 | Multiple Select Type | Award: 1 | Penalty: 0 | Compiler Design

Consider following two states I_j and I_k in $\text{SLR}(1)$ parsing. Here α, β and γ are non empty strings.

$$\text{I}_k \boxed{\begin{array}{l} \text{A} \rightarrow \text{B} \bullet \alpha\gamma \\ \text{C} \rightarrow \text{B} \bullet \alpha\beta \end{array}} \qquad \text{I}_j \boxed{\begin{array}{l} \text{A} \rightarrow \text{B} \bullet \alpha\gamma \\ \text{C} \rightarrow \text{B}\alpha\beta\bullet \end{array}}$$

Which of the following is/are TRUE?

A. There will be Shift-Reduce conflict in I_j if $\text{FIRST}(\alpha\gamma) \cap \text{FOLLOW}(c) \neq \varnothing$
B. There will be Shift-Reduce conflict in I_j if $\text{FIRST}(\alpha) \cap \text{FOLLOW}(c) \neq \varnothing$
C. There can never be any conflict in I_k
D. There is a Shift-Reduce conflict in I_k if next lookhead is α

Your Answer: | Correct Answer: A;B;C | Not Attempted | Time taken: 00min 00sec | Discuss

Q #26 | Numerical Type | Award: 2 | Penalty: 0 | Compiler Design

Consider the following grammar:

$$\begin{aligned} S &\rightarrow S \text{ and } S \\ &\mid S \text{ or } S \\ &\mid T \\ &\mid a \\ T &\rightarrow a \end{aligned}$$

In this grammar S and T are the non-terminals and S is the start symbol; "and", "or", and "a" are terminal symbols. How many parse trees are there for the string: "$a \text{ and } a \text{ or } a$"

Your Answer: | Correct Answer: 16 | Not Attempted | Time taken: 00min 00sec | Discuss

Q #27 | Multiple Select Type | Award: 2 | Penalty: 0 | Theory of Computation

Which of the following decision problems is decidable? (TM stands for Turing Machine)

A. Given a TM M and a string w, does M ever write the symbol $\#$ on its tape on input y?
B. Given a TM M, are there infinitely many $\text{TMs M}'$ accepting the same r.e. set $\text{A} = \text{L(M)}$?
C. Given a TM M and a string y, does M accept y?
D. $\{\text{M} \mid \text{TM M takes more than 2023 steps on some input}\}$?

Your Answer: | Correct Answer: B;D | Not Attempted | Time taken: 00min 00sec | Discuss

Q #28 | Multiple Choice Type | Award: 2 | Penalty: 0.67 | Linear Algebra

Suppose the matrix $\text{A} = \begin{bmatrix} a & b \\ c & d \end{bmatrix}$ has an eigenvalue 1 with associated eigenvector $x = \begin{bmatrix} 2 \\ 3 \end{bmatrix}$. What is $A^{50}x$?

A. $\begin{bmatrix} a & b \\ c & d \end{bmatrix}$
B. $\begin{bmatrix} a^{50} & b^{50} \\ c^{50} & d^{50} \end{bmatrix}$
C. $\begin{bmatrix} 2 \\ 3 \end{bmatrix}$
D. $\begin{bmatrix} 2^{50} \\ 3^{50} \end{bmatrix}$

Your Answer: | Correct Answer: C | Not Attempted | Time taken: 00min 00sec | Discuss

Q #29 | Multiple Choice Type | Award: 2 | Penalty: 0.67 | Calculus

Find the limit $\lim_{x \to \infty} \frac{x^2 + x + 1}{(3x+2)^2}$.

A. 1
B. $1/3$
C. 0
D. $1/9$

Your Answer: | Correct Answer: D | Not Attempted | Time taken: 00min 00sec | Discuss

Q #30 | Multiple Choice Type | Award: 2 | Penalty: 0.67 | Probability

Suppose that X is a continuous random variable such that it has the following probability density function -

$$f(x) = \begin{cases} \frac{1}{6}, & -2 \leq x \leq 4 \\ 0, & \text{otherwise} \end{cases}$$

Let Y be a random variable defined as $\mathrm{Y} = \mathrm{X}^2$.

What will be $\mathrm{P}(\mathrm{Y} \leq 4)$?

A. $1/3$
B. $2/3$
C. $1/6$
D. None of these

Your Answer: | Correct Answer: B | Not Attempted | Time taken: 00min 00sec | Discuss

Q #31 | Multiple Choice Type | Award: 2 | Penalty: 0.67 | Digital Logic

A sequential circuit is shown in the figure below. Let the state of the circuit be encoded as $\mathrm{Q_A Q_B}$. The notation $\mathrm{X} \rightarrow \mathrm{Y}$ implies that state Y is reachable from state X in a finite number of clock transitions.

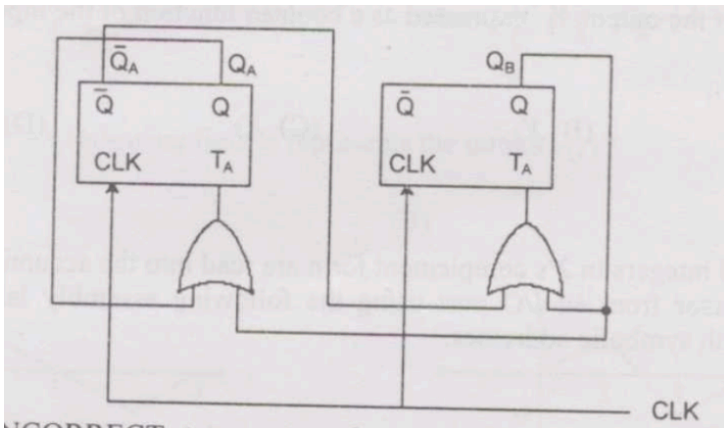

Identify the INCORRECT statement.

A. $01 \rightarrow 00$
B. $11 \rightarrow 01$
C. $01 \rightarrow 11$
D. $01 \rightarrow 10$

Your Answer: | Correct Answer: C | Not Attempted | Time taken: 00min 00sec | Discuss

Q #32 | Multiple Choice Type | Award: 2 | Penalty: 0.67 | Digital Logic

The following circuit using a 3-to-8 binary decoder and an OR gate is an implementation of the function:

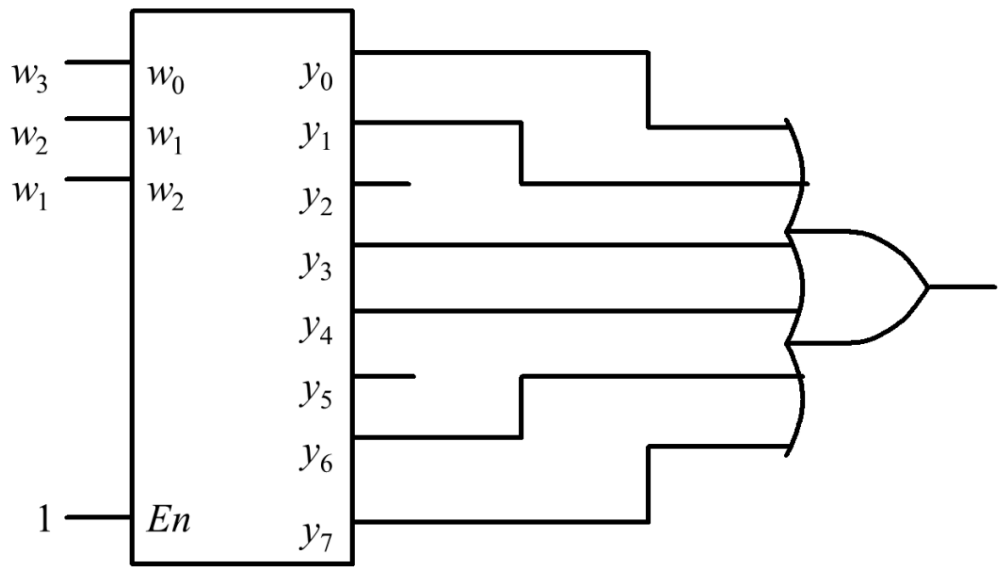

A. $f(w_1, w_2, w_3) = \sum_m (0, 1, 3, 4, 6, 7)$
B. $f(w_1, w_2, w_3) = \sum_m (1, 2, 4, 5, 7, 8)$
C. $f(w_1, w_2, w_3) = \prod_m (0, 1, 3, 4, 6, 7)$
D. $f(w_1, w_2, w_3) = \sum_m (2, 5)$

Your Answer: | Correct Answer: A | Not Attempted | Time taken: 00min 00sec | Discuss

Q #33 | Multiple Choice Type | Award: 2 | Penalty: 0.67 | Databases

Consider the following database schema:
Product (pid, name, brand, price, color), where pid is the primary key.
Consider the following SQL queries:

Query P :

```
SELECT     brand
FROM       Product
WHERE      color = 'green'
GROUP BY   brand
HAVING     COUNT(*) < 3
```

Query Q :

```
SELECT  DISTINCT brand
FROM    Product p
WHERE   (SELECT  COUNT(*)
         FROM    Product q
         WHERE   q.brand = p.brand
                 AND q.color = 'green') < 3
```

Which of the following is correct?

A. Query P, Q are equivalent.
B. Query P, Q are not equivalent But if we ignore the duplicates in the result of P, Q then P, Q are equivalent.
C. Query P, Q are not equivalent even if we ignore the duplicates in the result of P, Q.
D. Result of query P is always a superset of the result of query Q.

Your Answer: | Correct Answer: C | Not Attempted | Time taken: 00min 00sec | Discuss

Q #34 | Numerical Type | Award: 2 | Penalty: 0 | Databases

Consider the following tables R, S and T :

R

A	B
1	2
3	2
5	6
7	8
9	8

S

B	C
6	2
2	4
8	1
8	3
2	5

T

A	C
7	1
1	2
9	3
5	4
3	5

What is the number of tuples in the result of the following relational algebra query:

$$\pi_{\mathrm{A,B}}(\mathbf{R} \bowtie \mathbf{T}) \bowtie \pi_{\mathrm{B,C}}(\mathbf{S} \bowtie \mathbf{T})?$$

Your Answer: | Correct Answer: 9 | Not Attempted | Time taken: 00min 00sec | Discuss

Q #35 | Numerical Type | Award: 2 | Penalty: 0 | Databases

$\mathrm{B}^{+}-$ trees have different structures for leaf and non-leaf nodes. In $\mathrm{B}^{+}-$ tree leaf node contains keys and record pointer associated with it and a block pointer pointing to the next leaf node. Non-leaf nodes contains only keys and child pointer, there is no need to store record pointer at non-leaf node, because all keys are ultimately present on leaf node.For leaf node order will be maximum number of keys, record pointer pair a node can hold, but order of non leaf node is determined by maximum child pointers it can have. A $\mathrm{B}^{+}-$ tree index is to be built on the Name attribute of the relation $\mathrm{STUDENT}$. Assume that all student names are of length 8 bytes, disk blocks are of size 512 bytes, and index pointers, record pointers are of size 4 bytes, 5 bytes respectively. Given this scenario, the best choice for the order of leaf nodes and non-leaf nodes is X, Y respectively. Then what is $\mathrm{Y}-\mathrm{X}$?

Your Answer: | Correct Answer: 4 | Not Attempted | Time taken: 00min 00sec | Discuss

Q #36 | Multiple Choice Type | Award: 2 | Penalty: 0.67 | Databases

Consider the following two schedules consisting to two transaction T_1 and T_2 :

$$\mathrm{S}_1 : r_1(\mathrm{A}) w_1(\mathrm{A}) r_2(\mathrm{A}) w_2(\mathrm{A}) r_1(\mathrm{B}) w_1(\mathrm{B}) r_2(\mathrm{B}) w_2(\mathrm{B})$$
$$\mathrm{S}_2 : r_1(\mathrm{A}) w_1(\mathrm{A}) r_2(\mathrm{A}) r_1(\mathrm{B}) w_2(\mathrm{A}) w_1(\mathrm{B}) r_2(\mathrm{B}) w_2(\mathrm{B})$$

Which of the following is/are true about these schedules?

A. Both S_1 and S_2 are Conflict serializable but not conflict equivalent to each other.
B. S_1 and S_2 are conflict equivalent but not conflict serializable.
C. S_1 and S_2 are conflict equivalent and also conflict serializable.
D. S_1 and S_2 are neither conflict equivalent nor conflict serializable.

Your Answer: | Correct Answer: C | Not Attempted | Time taken: 00min 00sec | Discuss

Q #37 | Multiple Choice Type | Award: 2 | Penalty: 0.67 | CO & Architecture

Consider the following loop, written in C, which calculates the sum of all elements of a 16 by 512 matrix of 32-bit integers:

```
int sum = 0;
for (j = 0; j < 512; j++)
    for (i = 0; i < 16; i++)
        sum += A[i][j];
```

The matrix A is stored contiguously in memory in row-major order. Row-major order means that elements in the same row of the matrix are adjacent in memory. You may assume A starts at 0x0.
Assume:

- caches are initially empty.
- only accesses to matrix A cause memory references and all other necessary variables are stored in registers.
- instructions are in a separate instruction cache.

Consider a 4 KB direct-mapped data cache with 64-byte cache lines.
What will be the number of cache misses that will occur upon executing the above loop?

A. 512
B. 8192
C. 1024
D. 2048

Your Answer: | Correct Answer: B | Not Attempted | Time taken: 00min 00sec | Discuss

Q #38 | Numerical Type | Award: 2 | Penalty: 0 | Set Theory & Algebra

The number of partitions of $\{1,2,3,4,5\}$ into three blocks is 25. The total number of functions $f:\{1,2,3,4,5\} \rightarrow \{1,2,3,4\}$ with $|\text{Image}(f)\ | = 3$ is ?

Your Answer: | Correct Answer: 600 | Not Attempted | Time taken: 00min 00sec | Discuss

Q #39 | Multiple Select Type | Award: 2 | Penalty: 0 | Graph Theory

For which of the following does there exist a simple undirected graph $\mathrm{G} = (\mathrm{V}, \mathrm{E})$ satisfying the specified conditions?

A. A tree with 9 vertices and the sum of the degrees of all the vertices is 18.
B. A graph with 5 components, 12 vertices and 7 edges.
C. A graph with 5 components, 30 vertices and 24 edges.
D. A graph with 9 vertices, 9 edges, and no cycles.

Your Answer: | Correct Answer: B | Not Attempted | Time taken: 00min 00sec | Discuss

Q #40 | Multiple Choice Type | Award: 2 | Penalty: 0.67 | Set Theory & Algebra

Let G and H be two groups with the following properties:

1. G is a group such that $\forall a, b \in \mathrm{G}\left((a{*}b)^{-1} = b^{-1} * a^{-1}\right)$
2. H is a group such that $\forall a, b \in \mathrm{H}\left((a{*}b)^{-1} = a^{-1} * b^{-1}\right)$

then which of the following is True?

A. G is abelian, H may not be abelian.
B. Both G and H are abelian.
C. H is abelian, G may not be abelian.
D. None of H and G is necessarily abelian.

Your Answer: | Correct Answer: C | Not Attempted | Time taken: 00min 00sec | Discuss

Q #41 | Multiple Choice Type | Award: 2 | Penalty: 0.67 | Programming in C

What will be the output of following program?

Assume that all necessary libraries are included.

```c
void myfunction(char *s, char *t)
{
    int i = 0, n = 0;
    char p;
    n = strlen(s);
    while ( (p = *s) != '\0' )
    {
        t[n-i-1] = p;
        i++;
        s++;
    }
     return ;
 }
int main()
{
    char c[] = "hello";
    myfunction(c, c);
    printf("%s",c);
}
```

A. hello
B. heleh
C. olleh
D. ollel

Your Answer: | Correct Answer: B | Not Attempted | Time taken: 00min 00sec | Discuss

Q #42 | Multiple Choice Type | Award: 2 | Penalty: 0.67 | Programming in C

Consider a following recursive function f().

```c
#include<stdio.h>
int f(int *a, int n)
{
    if(n <= 0) return 0;
    if(*a % 2 == 0)
        return *a + f(a+1, n-1);
    else
        return *a -f(a+1, n-1);
}
```

Let array a contain numbers from 1 to 10 then what will be the output f(a,10)?

A. -1
B. 11
C. 9
D. None of these

Your Answer: | Correct Answer: A | Not Attempted | Time taken: 00min 00sec | Discuss

Q #43 | Multiple Choice Type | Award: 2 | Penalty: 0.67 | Data Structures

Consider the following linked list of **ListNode** objects, with a pointer named front that points to the first node:

$$\text{front} \rightarrow [1] \rightarrow [2] \rightarrow [4] \rightarrow [3] \rightarrow [5] \rightarrow [7] \rightarrow [11] \rightarrow [0] \rightarrow [6] \rightarrow [1] \rightarrow [1] \rightarrow \text{NULL}$$

What will be the state of the linked list after the following code run on it?

```
void linkedListMystery(ListNode *front){
    ListNode *curr = front;
    ListNode *prev = NULL;
    while(curr → next != NULL){
        if((curr → data)%2 ==0 && prev!=NULL){
            prev → next = curr → next;
        }
        else {
            curr → data --;
        }
        prev = curr;
        curr = curr → next;
    }
}
```

A. $0 \rightarrow 4 \rightarrow 2 \rightarrow 4 \rightarrow 6 \rightarrow 10 \rightarrow 6 \rightarrow 0 \rightarrow 0 \rightarrow$ NULL
B. $0 \rightarrow 4 \rightarrow 2 \rightarrow 4 \rightarrow 6 \rightarrow 10 \rightarrow 6 \rightarrow 0 \rightarrow 1 \rightarrow$ NULL
C. $0 \rightarrow 4 \rightarrow 2 \rightarrow 4 \rightarrow 6 \rightarrow 10 \rightarrow 0 \rightarrow 6 \rightarrow 0 \rightarrow$ NULL
D. $0 \rightarrow 4 \rightarrow 2 \rightarrow 4 \rightarrow 6 \rightarrow 10 \rightarrow 0 \rightarrow 6 \rightarrow 1 \rightarrow$ NULL

Your Answer: | **Correct Answer: B** | Not Attempted | Time taken: 00min 00sec | Discuss

Q #44 | Numerical Type | Award: 2 | Penalty: 0 | Data Structures

Shown Below is an AVL tree. Suppose all keys are distinct and integers.

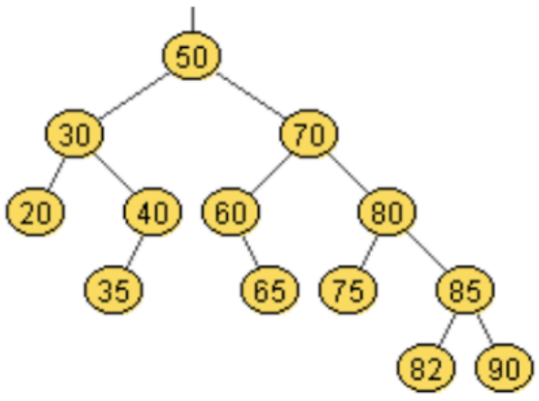

How many keys in the range $20 < x < 50$ that would require rotation upon insertion?

Your Answer: | **Correct Answer: 8** | Not Attempted | Time taken: 00min 00sec | Discuss

Q #45 | Multiple Choice Type | Award: 2 | Penalty: 0.67 | Data Structures

A binary tree T is full if either T has one node, or the root of T has two children which are roots of full binary trees. For instance, a full binary tree with depth 2 has one of the following three shapes:

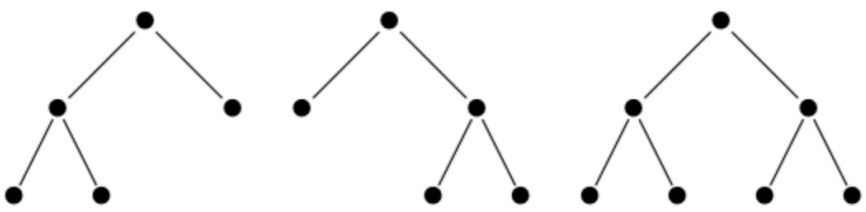

Let s_n be the total number of shapes of full binary trees with depth n. From the previous picture, we see that $s_2 = 3$. Also, it is easy to see that $s_0 = s_1 = 1$. Which of the following recursive formulas holds for all $n \geq 3$:

A. $2 \cdot s_{n-1} \sum_{k=0}^{n-2} s_k + s_{n-1}^2$
B. $2 \cdot s_{n-1} \sum_{k=0}^{n-1} s_k$
C. $s_{n-1} + s_{n-2}$
D. $s_{n-1} \cdot s_{n-2}$

Your Answer: | Correct Answer: A | Not Attempted | Time taken: 00min 00sec | Discuss

Q #46 | Multiple Select Type | Award: 2 | Penalty: 0 | Algorithms

For an array $\mathrm{A}[1 \ldots n]$, an inversion is any pair of items $\mathrm{A}[i]$ and $\mathrm{A}[j]$ such that $\mathrm{A}[i] < \mathrm{A}[j]$ but $i > j$.

We want to sort the input array $\mathrm{A}[1 \ldots n]$ in the ascending order.

Which of the following is/are CORRECT?

A. The running time of Insertion-Sort is $\Theta(n + \mathrm{I})$, where I is the number of inversions in the input array $\mathrm{A}[1 \ldots n]$.
B. If there are $\mathrm{ATMOST}\ n$ inversions in the array then insertion sort takes $\theta(n)$ to sort array.
C. If there is $\mathrm{EXACTLY}\ 1$ inversion in the array then insertion sort takes $\theta(n)$ to sort array.
D. If we know that there are $\mathrm{EXACTLY}\ \frac{\mathrm{N}^2 - \mathrm{N}}{2}$ inversions in the array then we can sort the array in $\theta(1)$ time.

Your Answer: | Correct Answer: A;B;C | Not Attempted | Time taken: 00min 00sec | Discuss

Q #47 | Numerical Type | Award: 2 | Penalty: 0 | Operating System

Suppose that the system that uses 3-level page table with 46-bit virtual address and a 32-bit physical address. Each level page table fits exactly in single frame. Page size is $8\ \mathrm{KB}$ and each page table entry size is 4 bytes. Given that the process requires $32\ \mathrm{KB}$ for code segment, $10\ \mathrm{KB}$ for data segment and $128\ \mathrm{KB}$ for stack segment. Assume each segment is allocated with contiguous memory. Let X and Y be minimum and maximum number of frames respectively that will be occupied by multi-level page table. What is the value of $\mathrm{X} + \mathrm{Y}$?

Your Answer: | Correct Answer: 16 | Not Attempted | Time taken: 00min 00sec | Discuss

Q #48 | Multiple Choice Type | Award: 2 | Penalty: 0.67 | Operating System

Consider the following task graph and given task lengths (in time units). The unspecified x and y are non-negative numbers.

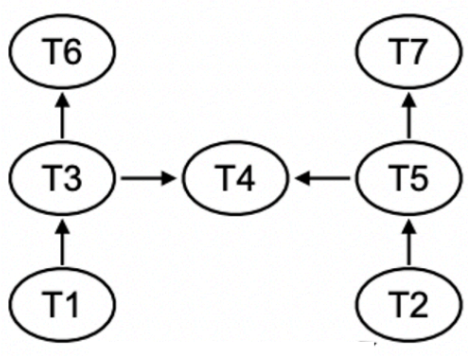

Task	Length
T1	5
T2	20
T3	25
T4	x
T5	10
T6	15
T7	y

Each edge $\mathrm{Ti} \rightarrow \mathrm{Tj}$ shows that we can not execute task Tj before Ti.
Suppose the workload is executed in a task-parallel manner for the lowest possible completion time on 3 CPUs. What is the total earliest time for $x = 10$ and $y = 20$ such that all tasks finished successfully?

We are allowed to schedule any task to any CPU to optimise the total time.

A. 50
B. 55
C. 45
D. 35

Your Answer: | Correct Answer: A | Not Attempted | Time taken: 00min 00sec | Discuss

Q #49 | Multiple Select Type | Award: 2 | Penalty: 0 | Operating System

Consider a file that is 1000 disk blocks in size. Assume that a disk block is appended to the end of the file, which causes the file size to grow to 1001 blocks. File is maintained using file descriptor which contains its metadata (like name of file, size of file etc).
Which of the following is/are correct about disk read and write operations to update the file. Assume file descriptor takes just one disk block space.

A. In case of Linked allocation it takes minimum 1001 reads and 2 writes to update the file
B. In case of Multilevel index allocation it takes minimum 2 reads and 3 writes to update the file
C. In case of Linked allocation it takes minimum 1002 reads and 2 writes to update the file
D. In case of Multilevel index allocation it takes minimum 3 reads and 3 writes to update the file

Your Answer: | Correct Answer: A;B | Not Attempted | Time taken: 00min 00sec | Discuss

Q #50 | Numerical Type | Award: 2 | Penalty: 0 | Operating System

Given the following piece of code

```
    main()
    {
        forkthem(5)
    }
5.  void forkthem(int n)
    {
        if(n > 0)
        {
            fork();
10.         forkthem(n-1);
        }
    }
```

How many new processes are created if the above piece of code is run?

Your Answer: | Correct Answer: 31 | Not Attempted | Time taken: 00min 00sec | Discuss

Q #51 | Multiple Choice Type | Award: 2 | Penalty: 0.67 | Computer Networks

Consider a message that is $7.5 * 10^6$ bits long to be sent from the source to the destination. (Assume header size is negligible relative to the entire message size). Suppose each link is 1.5 Mbps. Focus on transmission delays only and assume all other delay components are negligible.

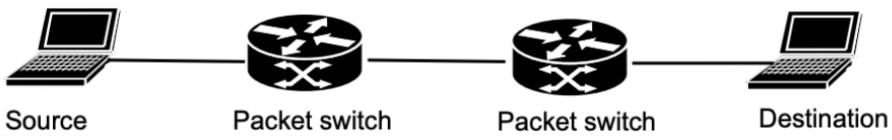

Suppose that the message is segmented into 5000 packets, with each packet being 1500 bits long. How long does it take to move the file from source host to destination host when message segmentation is used?

A. 5.002 sec
B. 4.990 sec
C. 4.012 sec
D. 5.236 sec

Your Answer: | Correct Answer: A | Not Attempted | Time taken: 00min 00sec | Discuss

Q #52 | Numerical Type | Award: 2 | Penalty: 0 | Computer Networks

There are two nodes on a network C and S. C is the client and S is the server. C wants to connect to S and send a message that is 35 kilobytes long using TCP. Assume that a single packet can hold up to 2 kilobytes of data and the headers are negligibly small. Processing time at both ends of the connection is negligible, but the latency in between node S and node C is 5 ms. The link transmission rate is 10 Megabits per second. Assume that control packets (SYN, ACK, etc) are very small and can be sent and received instantaneously. Assuming 3-way connection establishment and piggybacked ACKs, How many windows will be needed for the client to send the entire message?

Your Answer: | Correct Answer: 5 | Not Attempted | Time taken: 00min 00sec | Discuss

Q #53 | Numerical Type | Award: 2 | Penalty: 0 | Compiler Design

Consider the following $\mathrm{LL}(1)$ grammar.

$$\begin{aligned}
&\mathrm{S} \rightarrow \mathrm{A} \\
&\mathrm{A} \rightarrow \mathbf{a}\mathrm{BE} \\
&\mathrm{B} \rightarrow \mathbf{b}\mathrm{CD} \\
&\mathrm{C} \rightarrow \mathbf{c} \\
&\mathrm{D} \rightarrow \mathbf{d} \\
&\mathrm{E} \rightarrow \mathbf{e}\mathrm{FG} \\
&\mathrm{F} \rightarrow \mathbf{f} \\
&\mathrm{G} \rightarrow \mathbf{g}
\end{aligned}$$

In $\mathrm{LL}(1)$ parsing, at each step in the parse the rule that must be chosen is uniquely determined by the current nonterminal and the next one lookahead symbol. How many steps would the $\mathrm{LL}(1)$ parser take to parse string $\mathbf{abcdefg}$?

Your Answer: | Correct Answer: 8 | Not Attempted | Time taken: 00min 00sec | Discuss

Q #54 | Numerical Type | Award: 2 | Penalty: 0 | Compiler Design

Consider the following already augmented $\mathrm{LR}(1)$ grammar -

$$\begin{aligned}
&\mathrm{S}' \rightarrow \mathrm{S} \\
&\mathrm{S} \rightarrow \mathrm{aAB} \mid \mathrm{ecS} \mid \mathrm{aBb} \\
&\mathrm{A} \rightarrow \mathrm{aA} \mid \mathrm{a} \\
&\mathrm{B} \rightarrow \mathrm{cd} \mid \mathrm{Be} \mid \epsilon
\end{aligned}$$

We have drawn start state of $\mathrm{LR}(1)$ state automata as follow as-

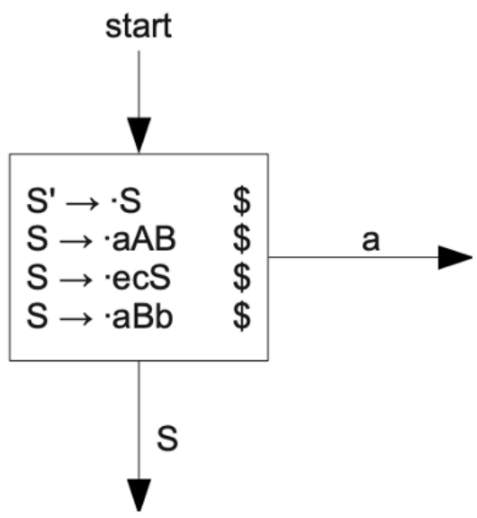

How many states we will be needing (including start state) to parse $aaaaee$. Your answer should include only necessary states and exclude all other states not needed to parse $aaaaee$.

Your Answer: | Correct Answer: 8 | Not Attempted | Time taken: 00min 00sec | Discuss

Q #55 | Multiple Select Type | Award: 2 | Penalty: 0 | Theory of Computation

If A is a set, let $|A|$ denote the cardinality of set A.

- We say $|B| = |A|$ if and only if there exists a bijection from B to A.
- We say $|B| < |A|$ if and only if there exists an injection from B to A but there is no surjection from B to A.

Which of the following is/are false?

A. If A is a proper subset of B, then $|A| < |B|$.
B. The set of all infinite sequences of 0s and 1s is uncountable.
C. If A is an uncountable set then $|A| = |R|$. (R is set of all real numbers)
D. Set B is infinitely countable if and only if there is a bijection $f : N \to B$. (N is set of all positive integers)

Your Answer: | Correct Answer: A;C | Not Attempted | Time taken: 00min 00sec | Discuss

Copyright & Stuff